SHARJAH INDIAN SCHOOL

SECOND TERM EXAMINATION – NOVEMBER 2010

Class : XII (Boys Wing) **Time Allotted : 3hrs.**
Subject : PHYSICS **Max. Marks : 70**
Day & Date:

General Instructions:

1. ***All questions are compulsory.***
2. ***There are 30 questions in total. Questions 1 to 8 carry one mark each, questions 9 to 18 carry two marks each, questions 19 to 27 carry three marks each and questions 28 to 30 carry five marks each.***
3. ***There is no overall choice. However, an internal choice has been provided in one question of two marks, one question of three marks and all three questions of five marks each. You have to attempt only one of the given choices in such questions.***
4. ***Use of calculators is not permitted.***
5. ***You may use the following physical constants wherever necessary :***

$c = 3 \times 10^{8} ms^{-1}$
$h = 6.6 \times 10^{-34} Js$
$e = 1.6 \times 10^{-19} C$
$\varepsilon_o = 8.85 \times 10^{-12} C^2N^{-1}m^{-2}$
$\mu_o = 4\pi \times 10^{-7} A^{-1} m T$

---

1. Define mobility. What is its S.I unit? 1

2. Two electric bulbs are marked 220V, 60W and 220V, 100W. Which of the two bulbs has greater resistance? Why? 1

3. What is the value of angle of dip at a place on the surface of the earth, where the horizontal component of earth's magnetic field is 0.5 times the resultant field at the place? 1

4. An a.c. generator generates an emf 'e' given by: e = 311 sin (100 πt) volt. Find the rms value of the emf generated by the generator. 1

5. A rectangular wire frame, shown below, is placed in a uniform magnetic field directed upward and normal to the plane of the paper. The part AB is connected to a spring. The spring is stretched and released when the wire AB has come to the position A'B' (t=0). How would the induced emf vary with time? Neglect damping.

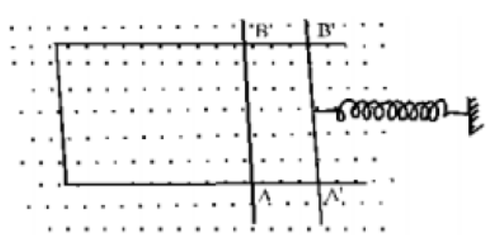

1

6. What is the ratio of speed of γ-rays and radio waves in vacuum? 1

7. Two nuclei have mass numbers in the ratio 1:8. What is the ratio of their densities? 1

8. The stopping potential obtained in an experiment on photoelectric effect is 2.5 V. What is the value of maximum kinetic energy of the electrons emitted from the metal? 1

9. (a) Can two equi-potential surfaces intersect each other? Explain.
   (b)Two charges – q and + q are located at points A (0, 0, -a) and B (0, 0, +a) respectively. How much work is done in moving a test charge 2 μC from point P (7, 0, 0) to Q (-3, 0, 0)? 2

2

10. Obtain the expression for the effective capacitance of the series combination of three capacitors of capacitances C_1, C_2 and C_3. 2

11. Calculate the current drawn from the battery in the given network.

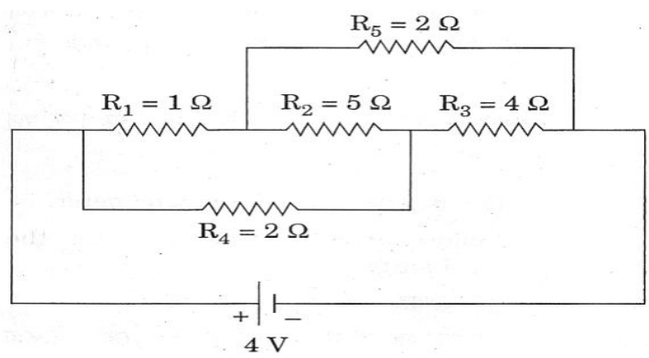

2

12. A charge 'q' moving in a straight line accelerated by a potential difference V. It enters a uniform magnetic field B perpendicular to its path. Show that the radius of its circular path is given by:

$$r = \frac{1}{B}\sqrt{\frac{2qV}{m}}$$

2

13. One face of a prism with refracting angle 30° is coated with silver. A ray incident on another face at an angle of 45° is refracted and reflected from the silver coated face and retraces its path. Find the refractive index of the prism. 2

14. Use the mirror equation to deduce that an object placed between f and 2f of a concave mirror produces a real image beyond 2f.

(OR)

Using lens equation, show that a convex lens form virtual and enlarged image if an object is kept between focus and optic centre of the lens. 2

15. Crystal diffraction experiments can be performed either by using electrons accelerated through appropriate voltage, or by using X – rays. If the wavelength of these probes (electrons or X – rays) is 1 A^o, estimate which of the two has greater energy. 2

16. Draw the labeled diagram of the experimental set up used in the verification of de-Broglie's concept of matter waves. 2

17. A rectangular wire loop of sides 8 cm and 2 cm with a small cut is moving out of a region of uniform magnetic field of magnitude 0.3 T directed normal to the loop. What is the emf developed across the cut if the velocity of the loop is $1 cms^{-1}$ in a direction normal to the longer side of the loop? For how long does the induced voltage last? 2

18. Define electrostatic potential at a point. Derive an expression for it due to a short electric dipole. Draw the graph showing the variation of potential with distance from the dipole. 3

19. Using Bohr's postulates, show that radius of nth orbit of Hydrogen atom is directly proportional to n^2. 3

20. An early model for an atom considered it to have a positively charged point nucleus of charge Ze, surrounded by a uniform density of negative charge up to a radius R. The atom as a whole is neutral. For this model, what is the electric field at a distance 'r' from the nucleus?

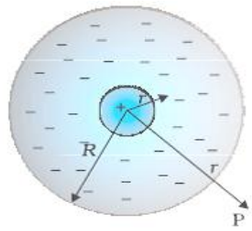

3

OR

A network of four 10 μF capacitors is connected to a 500 V supply, as shown in figure below:

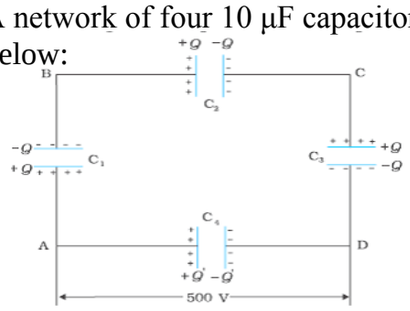

Determine:

(a) the equivalent capacitance of the network and

(b) the charge on each capacitor. 3

21. State Kirchoff's rules of electrical networks. On the basis of this, obtain Wheatstone's principle. 3

22. An e.m. wave is travelling in a medium with a velocity v = v i, The electric field oscillations, of this e.m. wave, are along the y-axis.
(a) Identify the direction in which the magnetic field oscillations are taking place, of the e.m. wave.
(b) How are the magnitudes of the electric and magnetic fields in the electromagnetic wave related to each other?
(c) What is the condition required to produce efficient heating of food items containing water, when placed in a microwave oven? 3

23. In a single slit diffraction experiment, when a tiny circular obstacle is placed in the path of light from a distant source, a bright spot is seen at the centre of the shadow of the obstacle. Explain why?
State two points of difference between the interference pattern obtained in Young's double slit experiment and the diffraction pattern due to a single slit. 3

24. Obtain an expression for the current drawn from the combination of 'm' rows of identical cells, each of emf E and internal resistance 'r'. Each row contains 'n' cells in series and the combination of the cells is connected to an external resistor of resistance 'R'. Under what condition, current in the circuit is maximum? 3

25. (a) The energy levels of an atom are shown below. Which of them will result in the transition of a photon of wavelength 275 nm?

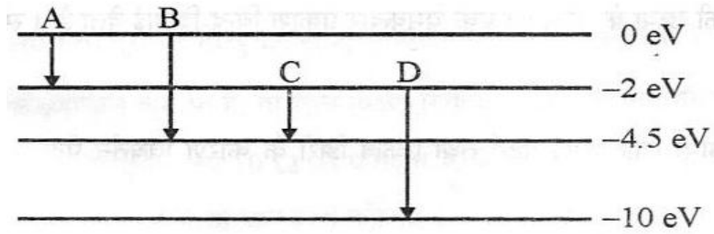

(b) Which transition corresponds to emission of radiation of maximum wavelength? 3

26. State Biot-Savart's law. Using this, derive an expression for the magnetic field at a point on the axial line of a circular loop, carrying current. 3

27. Trace the path of a ray through a triangular prism. Hence derive the equation connecting the angle of the prism (A), the angle of minimum deviation (D_m) and its refractive index (n). 3

28. Write an expression for the force experienced by a charge q, moving with a velocity $\vec{v}$, in a uniform magnetic field $\vec{B}$. Use this expression to

(i) define the unit of magnetic field.

(ii) obtain an expression for the force experienced by a current carrying conductor in a magnetic field.

Using the result obtained in (ii) above, along with the (well-known) expression for the magnetic field due to a long straight current carrying wire, deduce expression for the force between two long straight parallel wires carrying currents I_1 and I_2 in the same direction. 5

OR

Deduce the expression for the torque acting on a rectangular current loop placed in a uniform magnetic field. If $\vec{m}$ represents the magnetic moment of the current loop and $\vec{B}$ the magnetic field, show that the torque $\vec{\tau}$ can be expressed as,

$\vec{\tau} = \vec{m} \times \vec{B}$, indicating clearly the direction in which the torque acts with respect to the directions of $\vec{m}$ and $\vec{B}$.

Explain briefly how the working of a moving coil galvanometer is based on this principle. 5

29. A straight thick long wire of uniform cross section of radius 'a' is carrying a steady current I. Use Ampere's circuital law to obtain a relation showing the variation of the magnetic field (B_r) inside and outside the wire with distance r, ($r \leq a$) and ($r > a$) of the field point from the centre of its cross section. Plot a graph showing the nature of this variation.

Calculate the ratio of magnetic field at a point a/2 above the surface of the wire to that at a point a/2 below its surface. What is the maximum value of the field of this wire? 5

OR

(i) Describe an expression for the magnetic field at a point on the axis of a current carrying circular loop.

(ii) Two coaxial circular loops L_1 and L_2 of radii 3cm and 4cm are placed as shown. What should be the magnitude and direction of the current in the loop L_2 so that the net magnetic field at the point O be zero?

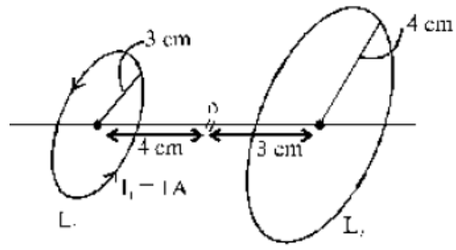

5

30. (a) What are coherent sources? Why are they necessary for observing a sustained interference pattern?
How are the two coherent sources obtained in the Young's double slit experiment?
(b) Show that the superposition of the waves originating from the two coherent sources S_1 and S_2 having displacement $y_1 = a \cos\omega t$ and $y_2 = a \cos(\omega t + \phi)$ at a point produce a resultant intensity

$$I = 4\, a^2 \cos^2(\phi/2)$$

Hence, write the conditions for the appearance of dark and bright fringes. 5

OR

(a) In a single narrow slit (illuminated by a monochromatic source) diffraction experiment, deduce the conditions for the central maximum and secondary maxima and secondary minima observed in the diffraction pattern. Also explain why the secondary maxima go on becoming weaker in intensity as the order increases.

(b) Answer the following questions:

i. How does the width of the slit affect the size of the central diffraction band?

ii. When a tiny circular obstacle is placed in the path of light from a distance source, why is a bright spot seen at the centre of the shadow of the obstacle? 5

****