*From the Dept. of Physics of Sharjah Indian School, Sharjah (Boys Wing)*

Dear students,

This material is to provide a supplement to what you have already finished learning and to help you 'not to slip' anything from your grip. Read the sections A, B, C and D carefully.

## Section A

***(This includes some terms and concepts which sometimes you might not have given stress on, plus some extra stuff)***

1. Expression for potential energy of charges in the presence of an external electric field (refer page number 65)
2. Learn the table8.1 page 283
3. Frequency response curve, Trans-conductance, Diffusion current, Drift current, Junction field. (from 'Semiconductors')
4. Positive beta decay. (from 'Nuclei')
5. Table 15.2
6. Fuse ($r^3 \alpha I^2$) (from 'Current electricity')
7. Admittance- reciprocal of impedance, Skin effect (from 'A.C')
8. Specific Inductive capacity – another name for 'Dielectric constant'.
9. Effective inductance of the series and parallel combination of inductors (Similar to resistors)
10. Read the chapters 'e.m.waves' and 'communication systems'.
11. What is 'corona discharge?
12. 'Fading' – the fluctuation in signal strength at a receiver.
13. NOR gate also can be treated as 'universal gate'.
14. Reverse saturation current is also known as 'leakage current'.
15. Depletion capacitance – the capacitance of a reverse-biased pn junction. P and N sides act as the plates and the depletion region acts as the dielectric.
16. Explanation of Bohr's second postulate from de-Broglie's concept.

## Section B

## (Some Useful Pages from NCERT book)

Refer the following pages of NCERT book

36, 40, 100, 121, 123, 129, 149 (Diagram), 146 (Diagram), 151 (Diagram), 156, 159, 160
172 (4.19), 172 (4.25), 179 (5.2), 184 (5.7) 191 (5.10), 200 (5.2), 201 (5.12), 202 (5.16, 5.17 & 5.20), 211 (ex.6.4 & 5), 221 (6.9), 224 (6.10), 230 (6.4 & 6.10), 251 (7.6), 252 (7.7 & 8), 268 (7.22), 274 (Figure 8.3), 279 (8.5), 283 (table 8.1)
315, 322 (Diagram& ex.9.7), 338, 346 (9.15,17, 18 & 29), 359 (10.2), 367 (10.4, 6), 384 (10.17, 18), 408 (18 &26), 417 (graph), 423 (12.4), 451 (Figure) 464(13.19), 480 & 481 (Figures 14.13 & 14.15), 482 (14.2, 14.4 & 14.5), 489 (figure14.25), 499 (14.9), 531 (15.6 and 15.7), pages 519 and 520 (Tables 15.2 and 15.3)

## Section C

## (Some extra questions to practice)

*[Try these questions. You may omit those questions which already you have done.]*

1. 1mg of Thorium emits 22 $\alpha$-particles per unit solid angle per minute. Calculate the half-life of Thorium. (Atomic mass of thorium = 232)
2. Write two essential conditions for sustained interference pattern to be produced on the screen.
3. Draw a graph showing the variation of intensity versus the position on the screen in Young's experiment when (a) both the slits are opened and (b) one of the slits is closed.

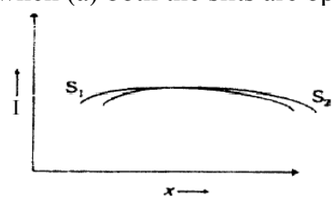


Hint:-

4. Electrons and photons possess the same de Broglie wavelength. Which of the two has greater kinetic energy?
5. If the maximum kinetic energy of the emitted electrons by a photocell is 5eV, find the stopping potential.
6. Two point charges of unknown magnitude and sign are placed at a distance 'd' apart. The electric field intensity is zero at a point, not between the charges, but on the line joining them. Write two essential conditions for this to happen.
7. The electric force between two electrons at a given distance apart is F Newton. What will be the force between two protons situated at the same distance?
8. The electric force between two electrons at a given distance apart is F Newton. What will be the force between an electron and a proton situated at the same distance?
9. A positively charged particle is free to move in an electric field. Will it always move along the line of force?
10. A small metallic charged sphere is placed at the centre of a large uncharged spherical shell and the two are connected by a wire. Will any charge move to the outer shell?
11. A is a metallic sphere placed between two charged metallic plates. A student draws the line of force as shown in figure. Is he correct?

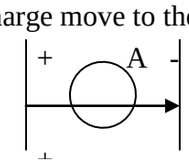


12. Can two equipotential surfaces intersect?
13. A cylinder of radius R and length L is placed in a uniform electric field parallel to the axis of cylinder. What is the electric flux through the whole cylinder?

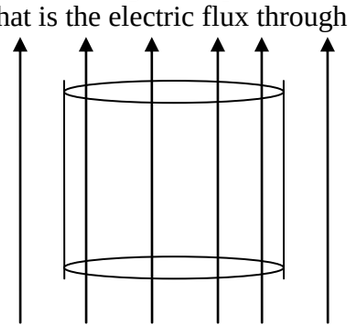

14. What is the net charge on a charged capacitor?
15. Two capacitors of capacitances $C_1$ and $C_2$ are connected in parallel. A charge q is given to this combination. What will be the potential difference across each capacitor?
16. Two identical capacitors $C_1$ and $C_2$ are connected as shown in the figure with a battery B. A dielectric slab is slipped between the plates of capacitor $C_2$, the battery remaining connected. What happens to the charge, the capacitance, the potential difference and stored energy of each capacitor?

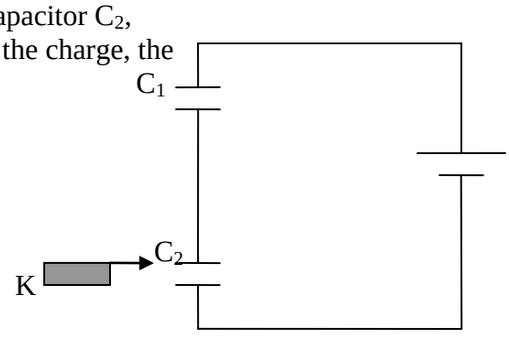

17. A parallel plate capacitor with no dielectric has a capacitance of 0.5μF. The space between the plates is then filled with equal amounts of two dielectrics of dielectric constant 2 and 3 in the two arrangements as shown below, one by one.

K = 2 K = 3

K = 2
K = 3

18. Two charged conducting spheres of radii a and b are connected to each other by a conducting wire. What is the ratio of (i) charges on spheres and (ii) electric fields at the surfaces of the two spheres.
19. A particle of mass m and charge (-q) enters the region between the two charged plates initially moving along X-axis with speed Vx as shown in figure. The length of each plate is L and a uniform electric field E is maintained between the plates. Show that the vertical deflection of the particle at the far edge of the plate is $\frac{qEL^2}{2mv_x^2}$.

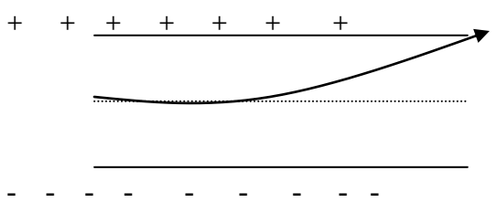


20. A point charge Q is placed at a distance r from a point A. The point A is within a hollow conductor while charge Q is outside as shown. What is the value of electric field strength at point A?

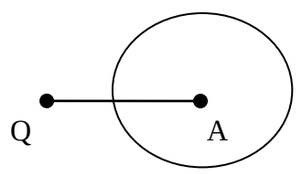


21. The electric field lines of force in a region are shown in figure. Three points A, B and C are taken in this region. At what point is the electric field strength (i) maximum (ii) minimum.

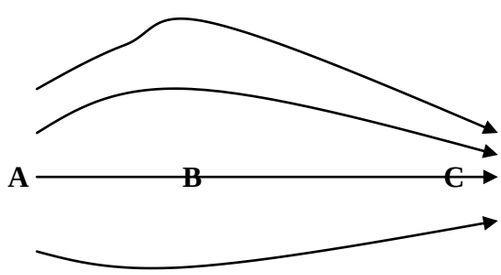


22. Two capacitors $C_1$ = 2μF and $C_2$ = 3 μF are connected in series. A potential difference of 12V is applied across the combination. What will be the ratio of potential difference across $C_1$ and $C_2$?
23. Two charges $q_1$ and $q_2$ placed at a separation d in air experience a force of 12N. If the charges are kept in a medium, the force reduces to 4N. What is the dielectric constant of the medium?
24. An electron moves a distance 6cm, when accelerated from rest by an electric field of strength $2 \times 10^4$ N/C. Calculate the time of travel.
25. 27 charged water droplets, each of radius 1mm and carrying a charge of $10^{-10}$C coalesce to form a single big drop. Calculate the potential of big drop.

26. What is the relation between the charges $q_1$, $q_2$ and $q_3$ if the electric flux through the surface $S_2$ is 8 times that through $S_1$.

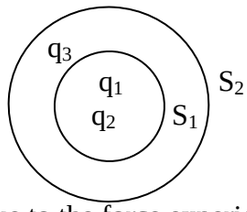


27. The electrons drift arises due to the force experienced by the electrons in electric field inside the conductor. But force should cause acceleration. Why then do the electrons acquire a steady average drift speed?
28. A steady current flows in a metallic conductor of non-uniform cross-section. Which of the following quantities is constant along the conductor: current, current, drift speed?
29. When a straight wire of resistance R is bent into U-shape, what happens to its resistance?
30. On increasing the current drawn from a cell, the potential difference across the terminals is lowered. Why?
31. Is it possible that the terminal potential difference across the cell be zero? If yes, state the condition.
32. State condition for maximum current to be drawn from the cell.

33. What is the value of current I in the adjoining circuit?

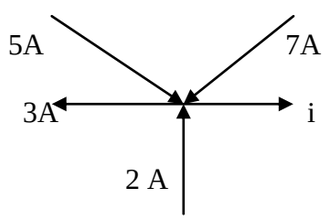


34. The lengths of three conducting wires are in the ratio 1:2:3. All the wires are of the same metal and their radii are also equal. If we join them in parallel across a battery, what will be the ratio of currents in them?
35. A current is passed through a steel wire heated to red. Then half of the wire is immersed in cold water. Which half of the wire will heat up more and why?
36. In a given circuit diagram, $E_1 = 2.0V$, $E_2 = 6.0V$ respectively and resistance $r_1$, $r_2$ and R are 2.0 Ω, 4.0 Ω and 10.0 Ω respectively. Calculate the value of current and indicate its direction. Also find the p.d between the points (i) B and A and (ii) A and C.

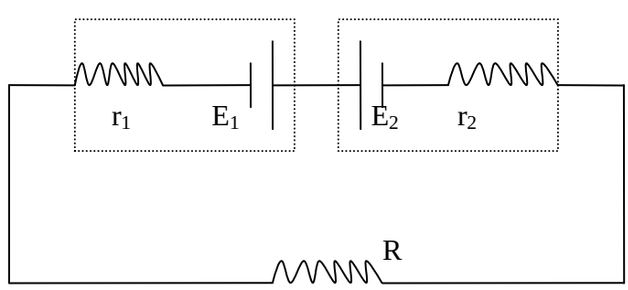


37. Which one of the two, ammeter or milli ammeter, has a higher resistance and why?
38. The electric potential V(x) in a region along the X-axis varies according to the relation $V(x) = 4x^2$. Calculate the force experienced by 1μC charge placed at x = 1m.
39. A fuse wire with circular cross section of radius 0.15m blows at 15A. What should be the radius of cross section of a fuse wire made of the same material, which will blow at 30A? (Given: $2^{2/3} = 1.59$)
40. n cells each of emf E and internal resistance r send the same current through an external resistance R whether the cells are connected in series or parallel. Then find the relation between R and r.

41. In a potentiometer a standard cell of emf 5V and of negligible resistance maintain a steady current through the potentiometer wire of length 5m. Two primary cells of emf's $E_1$ and $E_2$ are joined in series with (i) the same polarity and (ii) opposite polarity. The combination is connected through a galvanometer and a jockey to the potentiometer. The balancing lengths in the two cases are found to be 350cm and 50 cm respectively.
    (i) Draw the necessary diagram
    (ii) Find the value of the emf's of the two cells.
42. An electron traveling west to east enters a chamber having a uniform electric field in north to south direction. Specify the direction in which uniform magnetic field should be set to prevent the electron from deflecting from its straight line path.
43. A loop of irregular shape carrying current is located in an external magnetic field. If the wire is flexible, why does it change to a circular shape?
44. The earth's core is known to contain iron. Yet, geologists do not regard this as a source of earth's magnetism. Why?
45. Which type of fields is produced by a moving electron? If electron be at rest, then what type of field is produced?
46. What is the value of earth's magnetic field inside an iron box?
47. What is Bohr magneton?
48. A charged particle enters a uniform magnetic field at an angle $89^o$. What will be the path of particle?
49. A bar magnet has magnetic moment M. It is divided into n identical parts. Will each part be a magnetic dipole? What will be the magnetic moment of each part?
50. A test charge $1.6 \times 10^{-19}$ C is moving with a velocity $\mathbf{v} = (2\mathbf{i} + 3\mathbf{j})$ m/s in a magnetic field $\mathbf{B} = (2\mathbf{i} + 3\mathbf{j})$ Wb/m$^2$. Find the force on the test charge.
51. A galvanometer of resistance G has maximum safe potential difference Vo. What resistance must be connected in series so that it may become a voltmeter of range nVo volts?
52. In Bohr model of hydrogen atom, the electron circulates around the nucleus in circular orbit of radius 0.51 $A^o$ at a frequency $6.8 \times 10^{15}$ rev/sec. What is the magnetic field produced at the centre?
53. A beam of protons enters a uniform magnetic field of 0.3T with a velocity of $4 \times 10^5$ m/s at an angle of $60^o$ to the magnetic field. Find the radius of the helical path taken by the beam. Also find the pitch of the helix. (mass of proton = $1.67 \times 10^{-27}$ kg)
54. A long wire is bent as shown in the figure. What is the value of the magnetic field at the centre O?

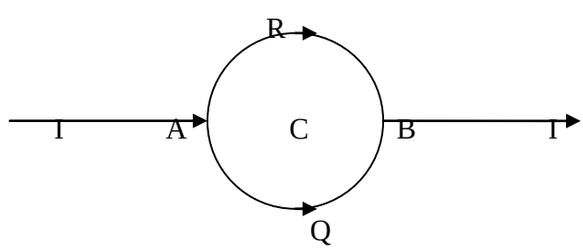

56. Use Lenz's law to determine the direction of induced current in the situation described by the following figures.
    (a) A wire of irregular shape turning into a circular shape.
    (b) A circular loop being deformed into a narrow straight wire.

(a) (b)

57. Power factor can often be improved by the use of a capacitor of appropriate capacitance in the circuit. Explain.
58. A capacitor is used in the primary circuit of an induction coil. Explain.
59. A applied voltage signal consists of a superposition of a dc voltage and ac voltage of high frequency. The circuit consists of an inductor and a capacitor in series. Show that the dc signal will appear across C and ac voltage across L.
60. Give the direction in which induced current flows in the wire loop, when the magnet moves towards the loop as shown.

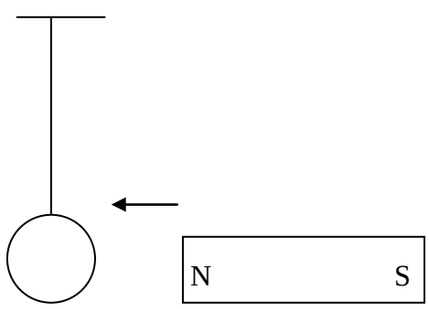


61. If the rate of change of current 2 A/s induces an emd of 40mV in the solenoid, what is the self-inductance of this solenoid?
62. What is the phase difference between voltage and current in a LCR series circuit at resonance?
63. What is the rms value of the alternating current shown in the figure.

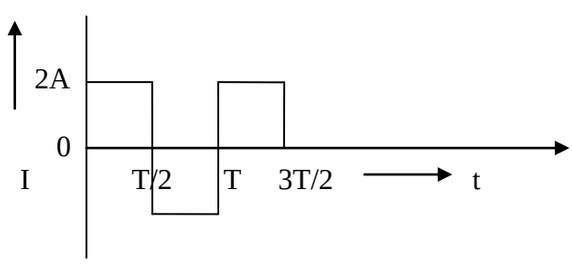


64. Of which of the following, the emf induced in a coil does not depend: number of turns in the coil, resistance of the coil and the rate of change of magnetic flux.
65. A conducting rod AB is moving parallel to X-axis in a uniform magnetic field pointing along +Z axis. Which case more work will be done?

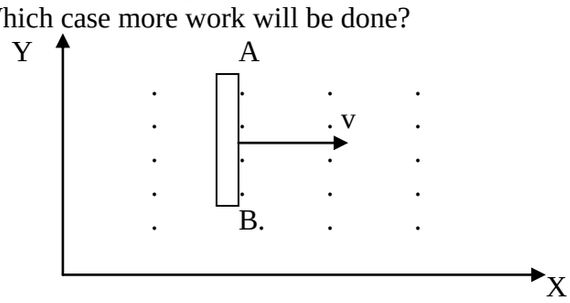


66. What is 'wattless current'?
67. What is the wattless component of the current?

68. In a plane em wave, the electric field oscillates with a frequency of $2 \times 10^{10}$ Hz and amplitude of 40 V/m. (i) What is the energy density of the wave? (ii) What is the wavelength of the wave.
69. When can a charge act as a source of em waves? How are the directions of electric and magnetic field vectors, in an em wave related to each other and to the direction of propagation of the wave? Which physical quantity has the same value for waves belonging to the different parts of the em spectrum?
70. Suppose that the electric field amplitudes of an em wave is Eo = 120 N/C and that its frequency is 50 MHz. (a) Determine Bo, $\omega$, k and $\lambda$. (b) Find expressions for **E** and **B**.
71. About 5% of the power of a 100W light bulb is converted to visible radiation. What is the average intensity of visible radiation, (a) at a distance of 1m from the bulb. And (b) at a distance of 10m? Assume the radiation is emitted isotropically and neglect reflection.
72. What is the relation between field vectors E and B?
73. What is the phase difference between electric and magnetic field vectors in an em wave?
74. Which part of the em spectrum corresponds to wavelengths (i) $10^{-10}$ m and (ii) $10^{-12}$m.
75. Which part(s) of the em spectrum corresponds to frequency (i) $10^{20}$ (ii) $10^{18}$ (iii) $10^{14}$ and (iv) $10^{6}$ Hz?
76. You have learnt that plane and convex mirrors produce virtual images of objects. Can they produce real images under any circumstances?
77. A fish under water is viewing obliquely at a fisherman standing on the bank of a lake, does the man look taller or shorter than what he actually is?
78. Why must both the objective and eye-piece of a compound microscope have short focal lengths?
79. In a single sit diffraction experiment, the width of the slit is made double the original width. How does this affect the size and intensity of the central diffraction band?
80. Which has greater critical angle: water-air interface or diamond-air interface?
81. On placing a transparent glass cube on the printed page of a book, it was found that the covered printed words of the book are not visible from any of the four sides of the cube. Explain your answer with the help of a simple diagram. Critical angle of glass with respect to air = $42^{o}$.
82. A lens has different radii of curvatures and its focal length is f. if both the surfaces are interchanged, what will be the effect on its focal length?
83. The line PQ in the adjoining ray diagram represents a lens. State, with proper reason, whether the lens is convex or concave?

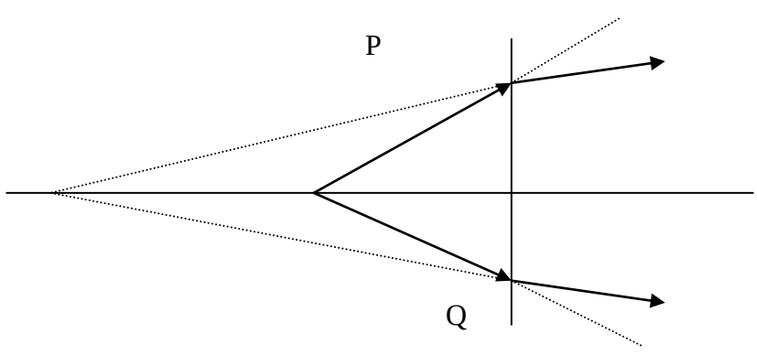


84. The radii of curvature of both the surfaces of a lens are equal. If one of the surfaces is made plane by grounding, then what happens to the focal length and power of the lens?
85. An equi-convex lens has refractive index 1.5. Write its focal length in terms of radius of curvature.
86. A lens forms the clear image of an object. Bow a fly sits on the lens. Will the image of fly be seen on the image of the object?
87. The central portion of a lens is covered with a black paper. Will the lens form full image of an object?
88. For which of the two colours : - blue or red, the focal length of a (i) convex lens (ii) concave lens be larger?
89. What type of lens is an air bubble inside water?
90. If rays of red, yellow, green and violet light are allowed to fall on a prism, for which colour will the angle of deviation be maximum? For which colour will it be minimum?
91. Sunlight reflected from soap bubble appears coloured. The sunlight emerging from prism also appears coloured. Is there any difference in the origin of these colours?
92. In the wave picture of light, intensity of light is determined by the square of amplitude of the wave. What determines the intensity of light in the photon picture of light?

93. Does polarizing angle for any transparent medium depend on the wavelength of light?
94. A crack in window pane appears silvery. Why?
95. Is dispersion possible in hollow prism? Give reason.
96. The objective of telescope A has diameter 3 times that of the objective of telescope B. How much amount of light is gathered by A compared to B?
97. Coloured spectrum is seen, when we look through a muslin cloth. Why?
98. Two students are separated by a 7 m partition in a room 10m high. If both light and sound can bend around the obstacles, how is that the students are unable to see each other, even though they converse easily.
99. A myopic person has been using spectacles of powers -1.0 D for distant vision. During old age he also needs to use separate reading glass of power +2.0D. Explain what might have happened.
100. The far point of a myopic person is 80cm in front of the eye. What is the power of the lens required to enable him to see very distant objects clearly?
101. A convex lens of focal length f is cut into two halves along the axis as shown. What is the focal length of each part?

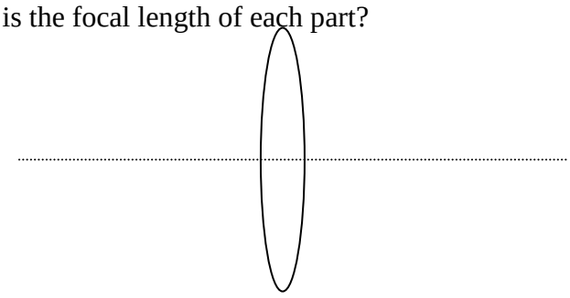

102. Using lens-maker's formula, show that the focal length of a plano-convex lens is given by f = R / (n-1), where R is the radius of curvature and n, the refractive index.
103. The distance between two point sources is 24cm. Find the position of a converging lens of focal length 9cm so that the image of both the sources are formed at the same point.
104. A narrow beam monochromatic beam of light of intensity I is incident on a glass plate. Another glass plate is kept close to the first one to and parallel to it. Each plate reflects 25 % of the incident light and transmits the remaining. Calculate the ratio of minimum and maximum intensity in the interference pattern formed by the two beams obtained after reflection from each plate.
105. Light of wavelength 5900A$^o$ falls normally on a slit of width 11.8 x 10 $^{-7}$ m. The resulting diffraction pattern is received on a screen. Calculate the angular position of the first minimum. Also find the angular width of the central maximum.
106. Slit of width 'a' is illuminated by monochromatic light of wavelength 550nm at normal incidence. Calculate the value of 'a', for position of (i) first minimum at an angle 30$^o$ and (ii) first maximum at an angle of 30$^o$.
107. Every metal has a definite work function, then why do photoelectrons not come out with the same energy of incident radiation if the radiation is monochromatic? Why is there an energy distribution of photoelectrons?
108. Show that the wavelength of electromagnetic radiation is equal to the de-Broglie wavelength of its quantum.
109. How did de-Broglie hypothesis lead to Bohr's quantum condition of atomic orbits?
110. A 100W sodium lamp radiates energy uniformly in all directions. The lamp is located at the centre of a large sphere that absorbs all the sodium light which is incident on it. The wavelength of the sodium light is 589nm. (a) What is the energy associated per photon with sodium light? (b) At what rate are the photons delivered to the sphere?
111. A mixture of three wavelengths $\lambda_1$, $\lambda_2$ and $\lambda_3$ (such that $\lambda_1 > \lambda_2 > \lambda_3$) is made to incident on a metal surface of threshold wavelength $\lambda_2$. If the number of photons of each wavelength is $10^6$ and the efficiency of photoelectric effect is 1 %, calculate the number of photons emitted.

112. A difference of 2.3 eV separates two energy levels in an atom. What is the frequency of radiation emitted when the atom makes transition from the upper level to the lower level.

113. The ground state energy of hydrogen atom is -13.6 eV. What is the kinetic and potential energies of the electron in this state?

114. What is the ratio of the volume of an atom to the volume of a nucleus? (Ans:$10^{15}$)

115. A 12.1 eV beam is used to bombard gaseous hydrogen at room temperature. What series of wavelengths will be emitted?

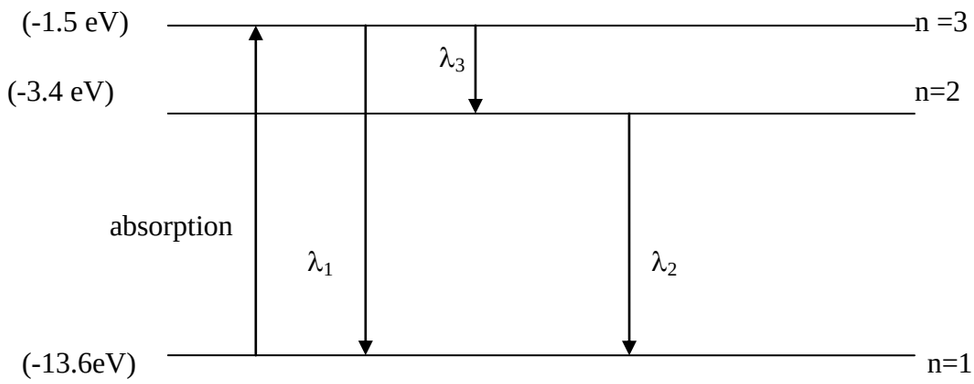


116. Obtain the amount of $_{27}Co^{60}$ necessary to provide a radioactive source of 8.0mCi strength. The half life of Co-60 is 5.3 years.

117. A given coin has a mass of 3.0 g. Calculate the nuclear energy that would be required to separate all the neutrons and protons from each other. For simplicity assume that the coin is entirely made of $_{29}Cu^{63}$ atoms (of mass 62.92960 u). The masses of proton and neutron are 1.00783 u and 1.00867 u respectively.

118. Find the relation between the three wavelengths $\lambda_1$, $\lambda_2$ and $\lambda_3$ from the energy level diagram shown below:

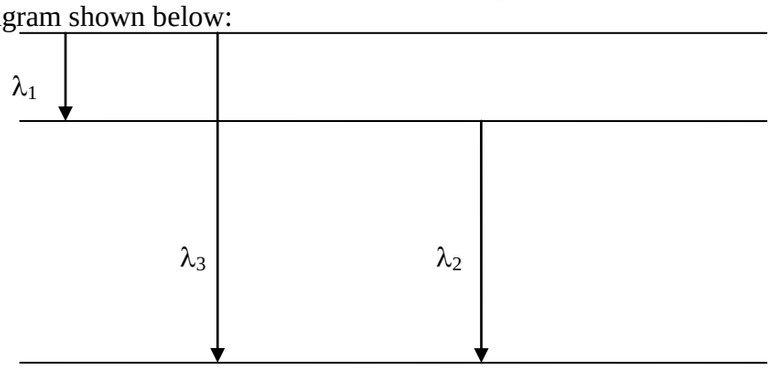


119. A 1000 MW fission reactor consumes half of its fuel in 5 years. How much $_{92}U^{235}$ did it contain initially? Assume that the reactor operates 80 % of the time and that all the energy generated arises from the fission of $_{92}U^{235}$ and that this nuclide is consumed only by the fission process. Energy generated per fission is 200MeV.

120. What is the longest wavelength photon that can ionize a hydrogen atom in its ground state? Specify the type of radiation.

121. A radioactive substance has N nuclei at time t. What will be the number disintegrated in 2 half lives?

119. The binding energies per nucleon of deuteron ($_1H^2$) and helium ($_2He^4$) are 1.1 MeV and 7.0 MeV respectively. How much energy will be released when two deuterons fuse to form a helium nucleus?

120. The decay constant of a radioactive nuclide is 1.386 /day. After how long will a given sample of this nuclide get reduced to 6.25 % of its initial value?

121. Tritium has a half-life of 12.5 years against beta-decay. Calculate the fraction of pure tritium left undecayed after 25 years.

122. In the given circuit a voltmeter C is connected across the lamp L. What changes would occur at the lamp and the voltmeter, if the resistance R is reduced in value? Give reason.

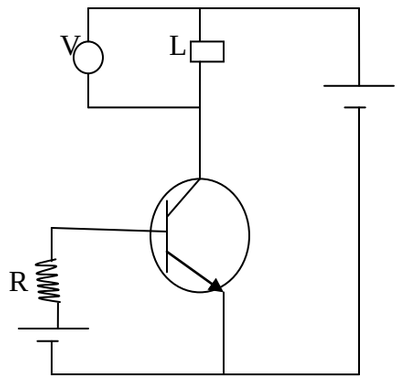


123. Germanium and Silicon junction diodes are connected in parallel. A resistance R, a 12 V battery, a milliammeter (mA) and key (K) are connected in series with them. When the key is closed a current begins to flow in the milliammeter. What will be the maximum reading of voltmeter connected across R?

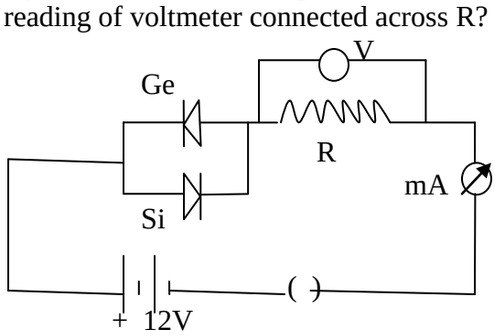


124. Can two pn junction diodes placed back to back work as a pnp transistor?

125. A pn junction diode when forward biased has a drop of 0.3V which is assumed to be independent of current. The current in excess of 10mA through the diode produces a large Joule-heating which damages the diode. If we want to use a 1.5V battery to forward bias the diode, what should be the value of resistor used in series with the diode, so that the maximum current does not exceed 6mA?

126. When the voltage drop across a pn junction is increased from 0.65 V to 0.70 V, the change in the diode current is 5mA. What is the dynamic resistance of the diode?

127. What is the junction current at equilibrium in an unbiased pn junction diode?

128. In a transistor the emitter is always forward-biased and the collector reverse biased. Why?

129. (Refer NCERT questions from “Communications”)

130. A modulating signal has zero dc component and peak to peak voltage of 11V. It is used to amplitude modulate a carrier of peak voltage of 10V. Calculate the modulation index.

## Section D

## (General Guidelines)

Tips

- Avoid mistakes in the questions involving magnetic field and electric field. There are many similar concepts in the both, such as intensity of the field, potential energy, dipole, torque, Gauss' theorem, flux etc… In such cases, you should doubly make sure that the question concerned is related to electric field or magnetic field.
- Similarly, avoid confusions in the questions to determine electric field or electric potential.
- Capacitors – when area divided, parallel and when distance is divided, it's series combination!
- Similar concepts are there in mirrors and lenses. Always learn the contrasting features in the equations, magnification, image formation etc between lenses and mirrors. In such questions, double-check whether it is lens or mirror.
- Do not forget to draw neat diagrams, wherever possible. Arrows in Ray diagrams, polarities in circuit diagrams etc are to be taken care of.
- Do all the calculations in the working column (R.H.S) and write the units for the final answer. Beware of 'conversion hazards'!
- Draw equivalent 'combination diagrams' for capacitors and resistors.
- Learn combinations of Lenses, resistors, capacitors and cells.
- 20% of the marks will be set to test your 'higher order thinking skills'.
- Collect the 'volatile topics' in order to revise just before you enter the examination hall and if you find questions related to such topics in the question paper, attempt them first.
- Avoid unnecessary discussions before the examination.
- Do not stick on a single question for a long time. Answers should be brief and to the point. You may underline the significant points, in the descriptive type questions.
- Read the questions carefully, before taking a decision on which direction to go! After deciding, do as fast as possible.
- Before proceeding to the next question, read the previous question again and make sure you have presented the answers for all the subsections of the question in the way it is asked.
- Always include diagram, equation etc., if possible, when you answer the application level questions.
- Try to finish answering the three 'five marks' questions in a maximum of 30 minutes.
- The '**Value Based Question'** should be answered carefully so that full marks can easily be scored.
- The papers you must practice:- CBSE Sample papers 2013, Last year's sample papers (3 papers), 2008 to 2012 Board papers, Qn. Papers with marking scheme for all subjects from 'www.cbse.nic.in'

Dear students,

To present yourself perfectly on the answer sheet,

- Maintain a good physical and mental health throughout these days.
- Try not to involve in any sort of unhealthy arguments.
- Maintain cleanliness in words and deeds.
- Sleep properly.
- Get blessings from parents and elders before going for the examination.
- Pray God to help you not to be misled.

*Good luck* to you all. Hope you will excel.

With all blessings

Dept. of Physics,
Sharjah Indian School – Boys Wing
25/12/2012