[On R.H.S]

Combination of lenses

Aim: To obtain a lens combination with the specified focal length by using two lenses from the given set of lenses.

Apparatus: A set of thin convex lenses, A single lens holder, A lens holder which can hold two lenses touching each other, A metre rod and a screen.

Theory:

1. The reciprocal of the focal length in metre is called power of a lens. It is expressed in dioptre. For lenses of power P_1 and P_2, the power P of the combination of the lenses is given as

$$P = P_1 + P_2$$

2. Let f_1 and f_2 be the focal length of the two lenses and F be the focal length of the lens combination then $\frac{1}{F} = \frac{1}{f_1} + \frac{1}{f_2}$

3.With a convex lens the real and inverted image of a distant object is formed at a distance equal to the focal length of the convex lens.

Procedure:

Take a convex lens (say focal length f_1) and fix it into a lens holder. Put the lens holder on the left of the screen and move the lens towards or away from the screen till a sharp, inverted image of distant object (say tree) is obtained on the screen. Measure the distance with the help of metre rod between the lens holder and screen where the sharp, inverted image of the distant object is focused. This distance gives the focal length of the convex lens. Replace the first lens by second lens (say focal length f_1) and repeat the steps given above to measure the focal length of the second lens. Now take a lens holder which can hold two lenses touching each other. Again repeat the steps again to find the focal length of the lens combination (say F).

Conclusion:

For a given set of two lenses the focal length of the combination of the two lenses can be obtained by using the relation

$$\frac{1}{F} = \frac{1}{f_1} + \frac{1}{f_2}$$

[On L.H.S]

Diagram:

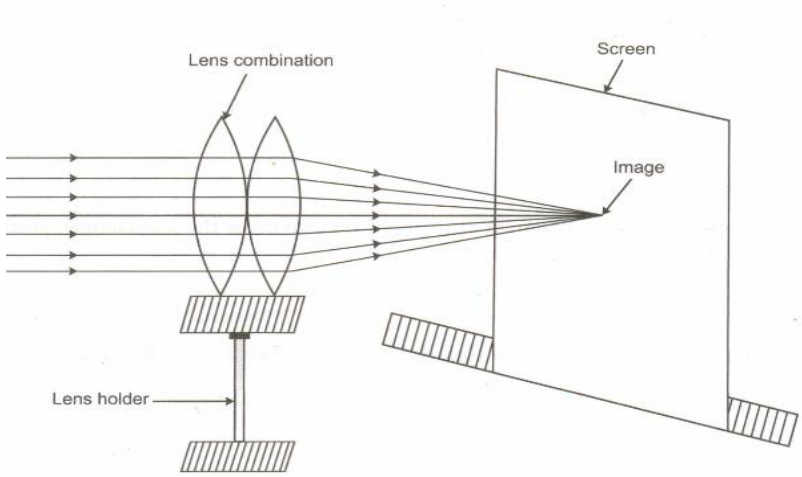

Observation:

Focal length of the first lens (f_1)	Focal length of the second lens (f_1)	Focal length of the combination (F)